THIS DRAWING IS UNPUBLISHED. RELEASED FOR PUBLICATION -.- .
© COPYRIGHT - BY TYCO ELECTRONICS CORPORATION. ALL RIGHTS RESERVED.

LOC	DIST
CM	0

REVISIONS

P	LTR	DESCRIPTION	DATE	DWN	APVD
	F	ECO-06-013158	27JUN06	BSV	DC

1. MATERIAL:
   HOUSING: NYLON, UL94V-2 (COLOR - NATURAL, COLOR OF PARTS MAY VARY).
   CONTACTS - 0.25 THK COPPER ALLOY.
2. CONTACT FINISH: 0.003 MIN THK TIN-LEAD OVER 0.00127 MIN THK NICKEL OVER ENTIRE CONTACT.
3. CONTACT FINISH: 0.00076 MIN THK GOLD PLATE ON PIN MATING SURFACE, 0.003 MIN THK TIN-LEAD PLATE ON SOLDER TAIL, ALL OVER 0.00127 MIN THK NICKEL BASE PLATE.
4. SOLDER TAIL MEETS AMP SOLDERABILITY SPECIFICATION 109-11-2.
5. MATES WITH SIMILARLY PLATED AMP-DUAC™ POWER CONNECTOR RECEPTACLE HOUSINGS/SOCKET CONTACTS.
6. RIBS ON FOUR CORNERS OPTIONAL.
7. AMP LOGO AND MATERIAL ID MAY BE LOCATED ON EITER LONG SIDE OF PART.
8. SIZE, SHAPE OR STYLE OF THIS FEATURE MAY VARY.
9. MATERIAL: HOUSING - NYLON, UL94V-2 (COLOR - DYED BLACK).
10. CONTACT FINISH: 0.003 MIN THK TIN OVER 0.00127 MIN THK NICKEL OVER ENTIRE CONTACT.
11. CONTACT FINISH: 0.00076 MIN THK GOLD PLATE ON PIN MATING SURFACE, 0.003 MIN THK TIN PLATE ON SOLDER TAIL, ALL OVER 0.00127 MIN THK NICKEL BASE PLATE.

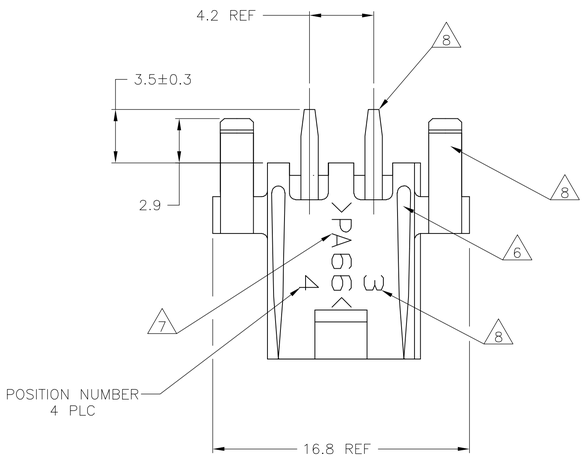

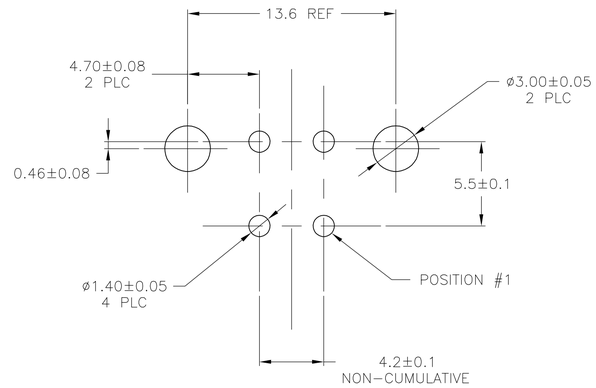

RECOMMENDED MOUNTING HOLE PATTERN
FOR 1.78 MAX THICK P.C. BOARD
COMPONENT SIDE SHOWN

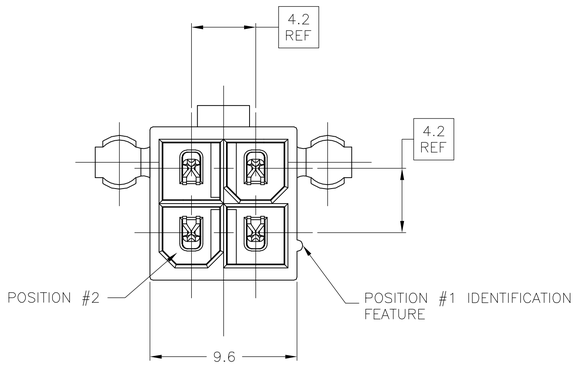

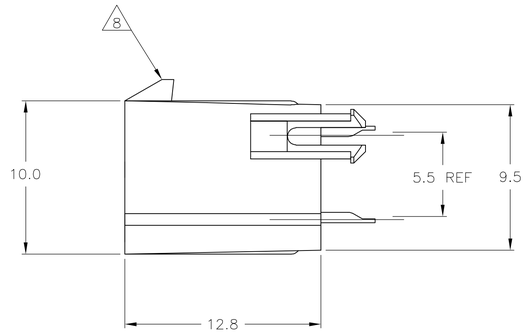

	CONTACT MATERIAL	CONTACT FINISH	HOUSING MATERIAL	HOUSING COLOR	PART NO
	1	11	9	9	1-794303-3
	1	11	1	1	1-794303-2
	1	10	1	1	1-794303-1
	1	3	9	9	794303-3
SUPERCEDED BY 1-794303-2	1	3	1	1	794303-2
SUPERCEDED BY 1-794303-1	1	2	1	1	794303-1

THIS DRAWING IS A CONTROLLED DOCUMENT.

DIMENSIONS: mm

TOLERANCES UNLESS OTHERWISE SPECIFIED:

0 PLC	± -
1 PLC	± 0.2
2 PLC	± 0.13
3 PLC	± -
4 PLC	± -
ANGLES	± 0°30'

MATERIAL: SEE TABLE
FINISH: SEE TABLE

DWN R. VESTAL 21OCT97
CHK R. SWING 21OCT97
APVD E. BEILES 21OCT97
PRODUCT SPEC 108-1699
APPLICATION SPEC —
WEIGHT —

tyco Electronics
Tyco Electronics Corporation
Harrisburg, Pa 17105-3608

NAME: ASSEMBLY, HEADER, VERTICAL, 4 POSITION, W/PEGS, W/DRAIN HOLES, TM

SIZE	CAGE CODE	DRAWING NO	RESTRICTED TO
A1	00779	C-794303	—

CUSTOMER DRAWING | SCALE 5:1 | SHEET 1 OF 1 | REV F